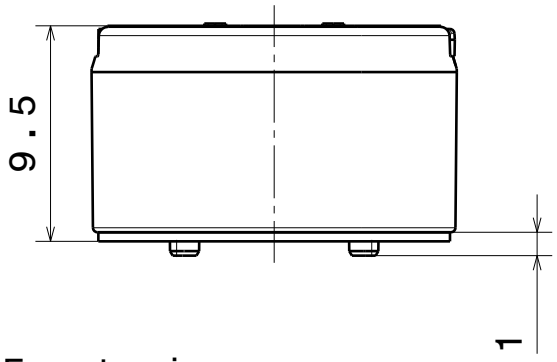

Front view

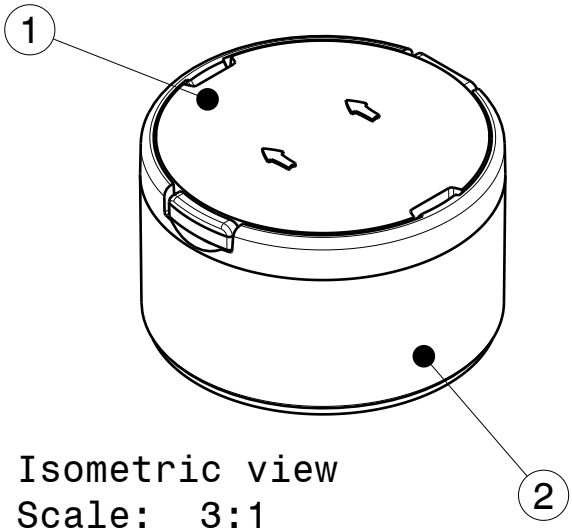

Isometric view
Scale: 3:1

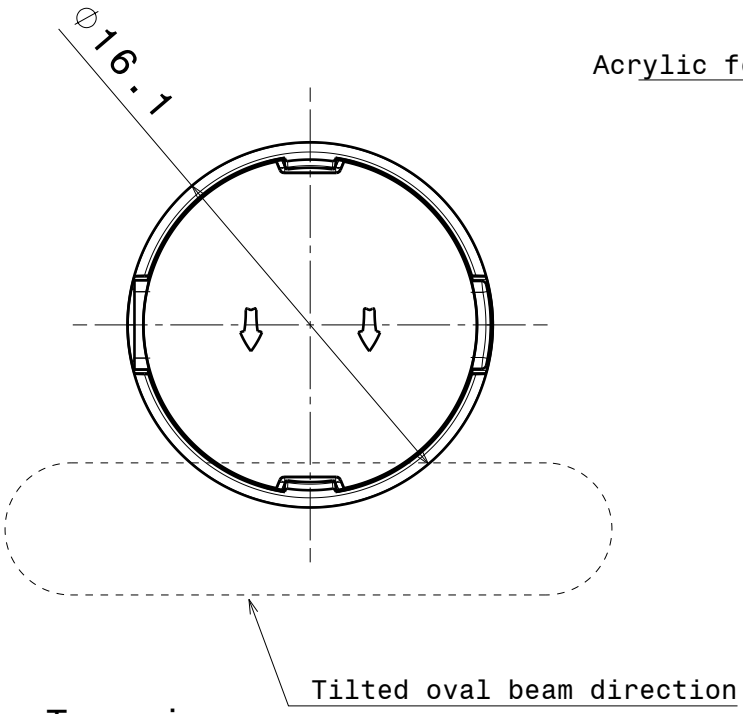

Top view

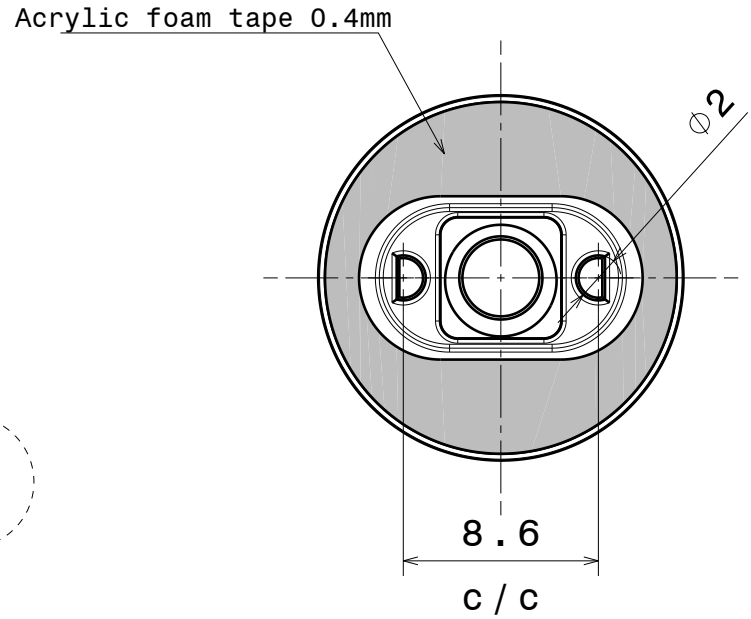

Bottom view

INDEX	PART NO	DESCRIPTION	MATERIAL	COLOUR
1	C15060	TINA2-O-WAS	PMMA	
2	C12372	TINA2-HLD-BLK	PC	black

Tolerances if not otherwise shown
According to DIN ISO 2768-1
Linear measures:
Up to 30mm class M, otherwise class C.
According to DIN ISO 2768-2
Form and position: class L

Ledil Oy
Salorankatu 10
FIN 24240 SALO
Finland

THIRD ANGLE PROJECTION:

DRAWING TITLE
CA15365_TINA2-O-WAS

SIZE: A4
PART NUMBER: CA15365

SCALE 3:1 | WEIGHT 1,7 g | SHEET 1/1